ISME

Model-based Approach for Multi-sensor Fault Identification in Power Plant Gas Turbines

S. Amirkhani[*]
PhD

A. Chaibakhsh[†]
Associate Professor

A. Ghaffari[‡]
Professor

In this paper, the multi-sensor fault diagnosis in the exhaust temperature sensors of a V94.2 heavy duty gas turbine is presented. A Laguerre network-based fuzzy modeling approach is presented to predict the output temperature of the gas turbine for sensor fault diagnosis. Due to the nonlinear dynamics of the gas turbine, in these models the Laguerre filter parts are related to the linear dynamic part of the models and the nonlinear parts of models are considered as neuro-fuzzy models. In order to deal with the dimensionality problems associated with fuzzy models, the nonlinear parts of models are considered as hierarchical fuzzy systems. In the residual evaluation phase, model error modeling adaptive threshold approach is used to increase fault detection robustness against the noise and disturbance. A new expert fuzzy system by multi-sensor information fusion is presented for the fault diagnosis system, which can examine the performance of all the sensors simultaneously. The result shows that the proposed fault diagnosis system could considerably increase reliability and safety.

Keywords: Gas turbine engine, Fault Identification, -Multisensor, Laguerre model, Fuzzy system.

1 Introduction

In recent years, increased competition in the energy market has made experts pay more attention to reducing the cost of repair and maintenance of industrial equipment. One of the strategies discussed in this context is to prevent possible problems in these machines, which is followed in the area of supervision and fault management of processes. Considering the importance of measuring equipment in the control and safety of the gas turbines, sensors' fault diagnosis is one of the most important issues. Fault occurrence in the temperature sensors, wrong temperature measurements and consequently an unnecessary system trip can be incredibly costly and affect the overall operation of the plant [1]. In general, the methods employed for the sensor fault diagnosis can be divided into the three main categories of model-based [2, 3, 4], data-driven [5], and signal-based techniques [6, 7]. In model-based fault diagnosis, either classic system identification or soft computing techniques can be used for model development. The former is mostly applicable to simple linear systems. Nonlinear mathematical models

[*]PhD, Faculty of Mechanical Engineering, University of Guilan, Rasht, Guilan, amirkhani_saeed@yahoo.com
[†] Corresponding Author, Associate Professor, Faculty of Mechanical Engineering, University of Guilan, Rasht, Guilan chaibakhsh@guilan.ac.ir
[‡]Professor, Faculty of Mechanical Engineering, K.N. Toosi University of Technology, Tehran, Iran ghaffari@kntu.ac.ir
Receive : 2019/05/10 Accepted : 2019/09/14

developed based on soft computing approaches are mainly used in the fault diagnosis of complex processes [8]. The fact that it is not essential to know the exact physical structure of dynamical systems has made them very useful for modelling nonlinear systems such as industrial gas turbines [9, 10, 11]. In most soft model-based fault detection works, in fact, the soft model is a nonlinear static model, while the real system has a dynamic behavior. In other words, the behavior of the system is also dependent on the parameters' values in the final moments [12]. For example, reference [13] was used a neuro fuzzy-based approach to provide nonlinear models for a gas turbine fault diagonal. In fact, the proposed neuro fuzzy models were nonlinear static models. Nonlinear orthonormal basis functions (NOBF) models can be employed to characterize the essential dynamical behavior of complex systems. Such models can be presented in the form of Laguerre network-based systems, in which a linear dynamic part (Laguerre filters) is followed by a non-linear static part (such as neural networks or fuzzy logic). Some advantages of Laguerre network-based models can be summarized as: their ability to describe the dynamics of a system with a small number of parameters, no need for the exact identification of dominant time constants or time delays, no needs for identifying the past terms of process variables and low sensitivity to the model order [14, 15, 16]. These models have been successfully employed in various industrial applications, including the works presented by Sanayei et al [17] and Jiafeng et al. [18]. As an important study in the field of dynamical soft modelling for fault detection, Mrugalski presented an identification method for designing dynamic GMDH neural networks for robust fault detection using an unscented Kalman filter [19]. Serdio et al. introduced the vectorized time-series models by using multivariate orthogonal transformation in data-driven system identification models to achieve residual-based fault detection in systems with multi-sensor networks [20]. Asgari et al. presented a nonlinear autoregressive exogenous (NARX) models for a single shaft gas turbine. The results showed that the proposed NARX models, successfully models the dynamic behavior of the system [21].

In this study, a Laguerre network-based hierarchical fuzzy system model is presented in order to predict the output temperature of a Siemens V94.2 heavy duty gas turbine. Hierarchical fuzzy structures enable fuzzy techniques to identify and model complex systems with a high number of inputs [22]. Input parameters enter the hierarchical fuzzy model after entering the 8-order Laguerre network. The hierarchical fuzzy model has two layers. The first layer comprises four Sugeno types of fuzzy models with nine inputs, where each model is considered to be associated with one of the parameters. The second layer includes a Sugeno type model with four inputs. The structure of models and the parameters of membership functions are defined by fuzzy c-mean clustering approach, where the parameters of fuzzy rules are adjusted using recursive least-squares estimation (RLS) technique. In the model-based fault detection process, the fault will be identified using the residuals estimated as the differences between the model outputs and the sensor measurements. Due to inherent uncertainties in the models, the deviations of the models' output from the measured value may not indicate an actual fault. These deviations often depend on the amplitude and frequency of inputs. Considering a threshold on the estimated residual is one way to deal with this problem; however, the threshold range may not be constant at different operating conditions [23]. In this case, a robustness feature can be added to the fault diagnosis procedure by using active or passive approaches [24]. In the active methods, a suitable performance factor is generally defined to optimize the objective that attributes higher sensitivity to faults and more robustness against noise and disturbance. Active robust fault diagnosis methods are often used for linear systems [25, 26]. The main disadvantage of these methods is that they are neither suitable nor applicable to the complex nonlinear real industrial applications [3]. Passive methods are the alternatives to the active approaches and often use the adaptive threshold methods and are more practical in the real industrial applications in comparison to the active approaches. This advantage is due to the feasibility of using soft computing methods in order to generate the adaptive threshold for these systems [3, 24, 27].

The simple threshold approach which is commonly used in many tasks by various criteria is less accurate compared to the adaptive threshold approach [26]. Model error modelling (MEM) is one of the important approaches, which is employed to achieve robustness. In this approach, a model is responsible for creating the adaptive threshold by predicting the residuals [28].
In this study, a neuro-fuzzy model is used to create the adaptive threshold. Multiple sensors have been employed in various systems to achieve an accurate understanding of important information and redundancy [29]. Gas turbines exhaust temperature is one of the most important control parameters in the gas turbine cycle. In the fault diagnosis section of this paper, multi-sensor fault detection, using high-level information fusion (Decision-level fusion), has been employed. Multi-sensor information fusion can be used to develop a more accurate and reliable fault detection system [30]. In this study, an expert fuzzy system is presented, which works based on (sensors and soft models) residual information for fault detection. In model-based fault detection methods, malfunction of the models to correctly predict the behavior of systems, which can result in an increase in the number of false alarms, is among the main concerns. The proposed multi-sensor fault detection fuzzy system, intended to deal with this problem, allows us to recognize the possible malfunctions of soft models and also faults in models' inputs.

This paper is organized as follows: section 2 presents a brief description of the gas turbine and datasets. In section 3, the procedure of the modelling and implementation of Laguerre network-based hierarchical fuzzy system is presented. In section 4, first, the adaptive threshold method is explained, and then the implementation of the error model in the adaptive threshold generation is introduced. Section 5 is dedicated to the implementation of the proposed fault diagnosis method. Finally, the conclusion is presented in section 6.

2 System and dataset description

The temperature sensors' failure would cause non-optimal operation of gas turbines, undesired system trips, and severe damages to components. In this study, a Laguerre network-based hierarchical fuzzy system model is used to predict the output temperature of gas turbines for the proposed model-based fault detection. Figure (1) illustrates the mechanism of the fault detection and isolation of gas turbine output temperature sensors.

In this paper, a 5th generation $V94.2\ (SGT5-2000E)$ heavy-duty gas turbine engine is considered. The compressor pressure ratio (CPR) and the mass flow rate of the turbine are 11.8 and 535 kg/s, respectively and the turbine inlet temperature reaches up to $1348.15K\ (1075^{\circ}C)$ when the engine runs in ISO condition. At this operational state the heat transfer rate is $10432kJ/kWh$ which cause fluid yielding the turbine exhaust temperature to reach $547^{\circ}C$ The gross power output is $166MW$ and the gross efficiency is 34.5 percent at $50Hz$ frequency.
In the proposed model, a set of four variables, including compressor outlet temperature, inlet guide vane (IGV) position, compressor maximum discharge pressure, and fuel flow rate are utilized as inputs to predict the gas turbine engine exhaust temperature. The exhaust temperature is measured by six sensors mounted in the circumference of the exhaust cross-section of the turbine in 60° intervals. The sensors' data is collected in a 9500 s time with a sampling rate of 1 s. This data acquisition period spans the transient and steady state operation of the engine as the load increases from 39.5 to the full load condition. In the next step, the recorded data is divided into training, validation and test data, of which 60 (or 5700 samples) is employed for the model training, 20% (or 1900 samples) is used for validation, and the remaining 20% is dedicated to the testing phase. It should be noted that changing the environmental parameters such as temperature and humidity can cause disturbances in gas turbine. Compressor outlet temperature is one of the parameters that can suffer disturbances.
In addition, as a result of environmental disturbances, the inlet guide vane position and fuel flow rate can be changed by the controller's command.

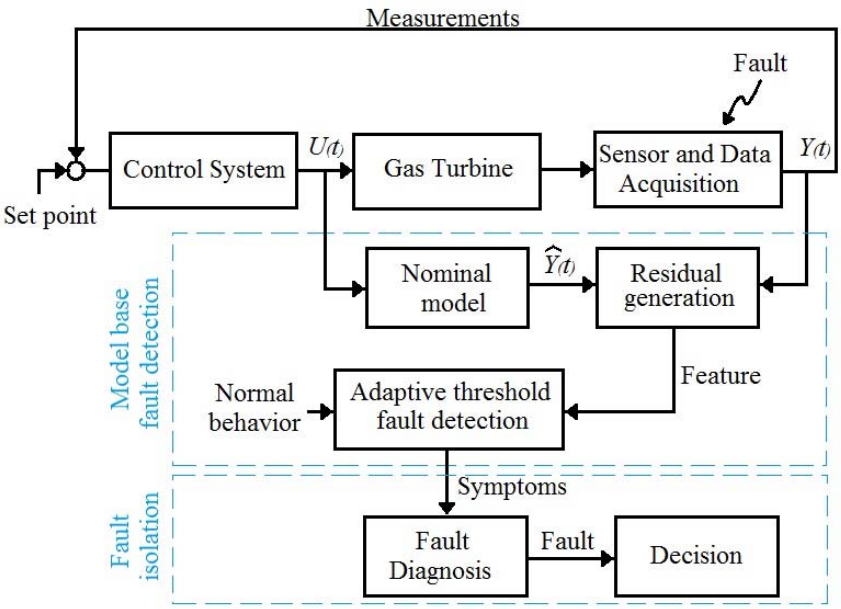

Figure 1 An overview of sensor fault detection and isolation

3 Laguerre network-based hierarchical fuzzy system model

3.1 Laguerre based network fuzzy system

Nonlinear autoregressive exogenous model topology (NARX) is a common method to describe the nonlinear behaviors of dynamic systems. The behavior which can be presented as a discrete time nonlinear mapping on some previously measured outputs and inputs is given as

$$y(k) = f(u(k),\ u(k-1),\ \ldots,\ u(k-n_u),\ \mathrm{y(k\text{-}1)},\ \mathrm{y(k\text{-}2)},\ \ldots,\mathrm{y(k\text{-}n}_y)) \tag{1}$$

where n_u and n_y are the number of past sample data of input and output respectively, which contribute to the current output calculation $y(k)$. They also represent the dynamic order of the system. In the above equation, $f(.)$ is a nonlinear operator that can adopt either a neural networks, fuzzy systems, or polynomials mapping functions. In NARX models a direct feedback structure is often used to stabilize the dynamics of the system. However, feedback loops can result in error accumulation in the system.

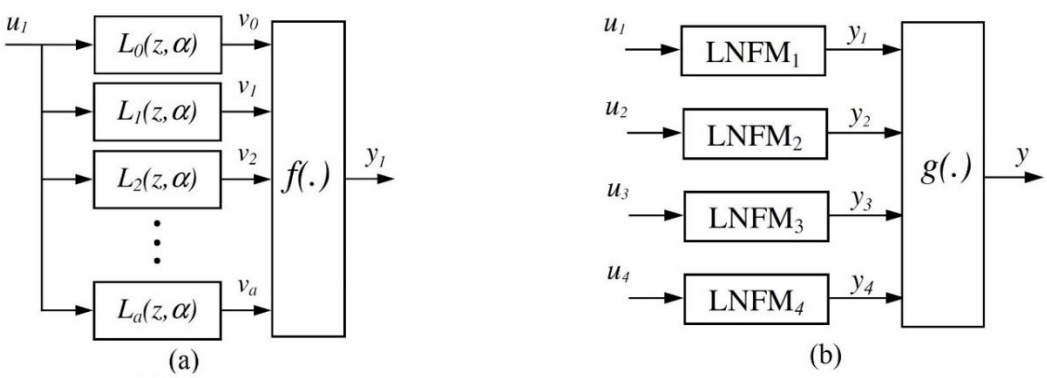

Figure 2 a) Structure of Laguerre network based fuzzy model, b) Laguerre network with hierarchical fuzzy structure

Removing the output feedback can improve the handling of consistency problem in NARX models [31]. This is implemented, as expressed in Eq. (1), by using the delayed input and output signals. By replacing the delay shift operators in Eq. (1) with orthonormal basis functions such as Laguerre and Kautz basis, the model can be improved [32, 33]. This structure is known as nonlinear orthonormal basis function (NOBF), which is categorized in the class of Wiener type models [34]. A Laguerre network based model is expressed as

$$y(k) = f(l_0(k) * u(k),\ l_1(k) * u(k), \ldots,\ l_a(k) * u(k)) \tag{2}$$

where $l_i(k)$s are Laguerre basis filters. In our method, the nonlinear mapping function, $f(.)$, employs a fuzzy logic system, that is, Laguerre network based fuzzy model (LNFM). The nonlinear system dynamics can be approximated by applying an interpolation scheme on the local models via a fuzzy inference mechanism. The fuzzy regions are described by the antecedents in the input space, while the consequents describe the local linear models in the corresponding fuzzy subspaces [35, 36]. In Figure (2-a), the structure of a LNFM is presented, in which $L_a(z,\alpha)$ is a discrete time representation of $L_a(k)$ in z-domain. In complicated dynamic systems, the outputs are often dependent on numerous variables of the system. Despite the good performances of LNFM models, increasing the number of variables and the size of training dataset is problematic for the training of the fuzzy systems. This is referred to as a "curse of dimensionality" or "fuzzy rule explosion" problem [32, 37]. When the dimensions of data sets are increased the number of tuneable parameters rises.

To deal with the aforementioned problems, employing hierarchical fuzzy systems (HFS) to model the nonlinear part of the system is an appropriate approach [38]. In Addition, employing data clustering techniques with the purpose of reducing the number of fuzzy rules and the corresponding tuneable parameters is advised [39, 40]. The nonlinear part of the model, illustrated in Figure (2-b), is a hierarchical fuzzy structure. Four LNFM outputs are adopted as the inputs of the mapping function $g(.)$, which is a fuzzy logic model, as well.

3.1.1 Laguerre Filter

Discrete time Laguerre functions as complete orthonormal set in z-domain is given by

$$L_i(z,\alpha) = \frac{\sqrt{1-\alpha^2}}{1-\alpha z^{-1}} \left(\frac{-\alpha + z^{-1}}{1-\alpha z^{-1}}\right)^i \qquad ,i=0,1,2,\ldots \tag{3}$$

where $\alpha \in \{\Re : |\alpha| < 1\}$ is the pole parameter that determines the rate of the exponential decay of the Laguerre functions responses. The dominant pole α is an adjustable parameter determined experimentally or through an optimization scheme [41]. It is possible to use the system identification technique to fit a first order model on input-output data set and capture the process time constant [17]. A linear discrete time system $\tilde{H}(z)$ is represented as

$$\tilde{H}(z) = \sum_{i=0}^{\infty} b_i(\alpha) L_i(z,\alpha) \tag{4}$$

The Laguerre coefficients, represented by $b_i(\alpha)$ in the above equation, are

$$b_i(\alpha) = \left\langle \tilde{H}(z), L_i(z,\alpha) \right\rangle = \frac{1}{2\pi j} \oint_C \tilde{H}(z) L_i(z^{-1},\alpha) z^{-1} dz \tag{5}$$

in which C is a circle of radius higher than 1 and lower than $|\alpha|^{-1}$, defined as $C = \{z \in \mathbb{C} : 1 < |z| < |\alpha|^{-1}\}$ [42]. For physical systems, the transfer function, $\tilde{H}(z)$, can be

approximated by the limited order of Laguerre polynomial [41]. Thus, for a truncated model with $(\alpha+1)$ stages, the transfer function $H(z)$ is expressed as

$$H(z)=\frac{Y(z)}{U(z)}=\sum_{i=0}^{a} b_i(\alpha)L_i(z,\alpha) \tag{6}$$

where $U(z)$ and $Y(z)$ are the input and output of the system [41], therefore, the outputs are

$$Y(z)=\sum_{i=0}^{a} b_i(\alpha)V_i(z) \tag{7}$$

And

$$V_i(z)=U(z)L_i(z,\alpha), \quad i=0,1,2,...,a \tag{8}$$

A Laguerre network consists of a first order low-pass filter and $(i-1)$th order identical all-pass filters. By considering $\alpha=0$, $L_i(z,\alpha)$ terms will turn into regular delay operators, and $H(z)$ into the usual FIR (finite input response) model. For each region at input space, a local linear model is developed using the polynomial presented in Eq. (6).

3.1.2 Neuro fuzzy system

The nonlinear mapping functions, $f(.)$, $g(.)$, are assumed to be of the first order Takagi, Sugeno and Kang (TSK) type of fuzzy models. In the TSK model, the fuzzy if-then statements are formed in a network structure, namely a neuro-fuzzy system [43]. The TSK fuzzy system can be trained by neuro-computing method or other soft computing methods, one of which is known as the adaptive neuro-fuzzy inference system or ANFIS [44]. The first order TSK fuzzy model adopts a set of if-then statements in the form of

$$R_i: \quad \text{if } (v_0 \text{ is } \mathrm{A}_{i,1} \text{ and } ... \, v_a \text{ is } \mathrm{A}_{i,a+1}) \text{ then } \mathrm{y}_i(k)=b_{i,(a+1)}+\sum_{j=0}^{a} b_{i,j}v_j(k) \tag{9}$$

as its rule base. In Eq. (9(, $A_{i,j}$ are the membership functions associated with jth input variable. In this structure, a linear combination of the input variables are considered as the conclusion functions of fuzzy rules. The firing degrees of the fuzzy rules are calculated through the five fuzzy layers. The weighted sum average according to rule R_i is

$$\mathrm{y}=\sum_{i=1}^{c} y_i\overline{w}_i \quad ; \quad \overline{w}_i=\frac{\Pi_{j=1}^{N}A_{i,j}(.)}{\sum_{i=1}^{c}[\Pi_{j=1}^{N}A_{i,j}(.)} \tag{10}$$

where N is the number of inputs in the fuzzy system which equals $a+1$ and the number of fuzzy rules (the number of cluster centers) is expressed by c. The membership functions, $A_{i,j}$, are Gaussian specified by the center σ and the spread ξ specified as

$$A_{i,j}(x_r)=\exp[-(\frac{x_r-\xi_{i,j}}{\sigma_{i,j}})^2] \tag{11}$$

It is noted that by increasing the number of inputs and their associated membership functions, the number of fuzzy rules would exponentially increase. As a result, the computation efforts for training the fuzzy rules increase significantly. In this case, the fuzzy c-means (FCM) algorithm could be employed in order to define the fuzzy model structure and reduce the number of fuzzy rules. The FCM algorithm is the most common fuzzy clustering algorithm. This algorithm divides the data set into c subsets presented by fuzzy sets as $F=\{F_1,...,F_c\}$, based on the similarity/dissimilarity of each cluster member. In general, this is defined by the distance of data points from the centers of clusters [45].The distance between q_i and z_j is defined

$$d_{i,j}^2(x_r) = \left\| z_j - q_i \right\|^2 = (z_j - q_i)^T (z_j - q_i) \tag{12}$$

where $Q = \{q_1, ..., q_c\} \subset R^s$ and $Z = \{z_1, ..., z_n\} \subset R^s$ are the vector of cluster centers and unlabeled data set, respectively. In order to find the best possible solution, the following objective function has to be minimized

$$\min : J_m(M, Q) = \sum_{j=1}^{n} \sum_{i=1}^{c} (\mu_{i,j})^m d_{i,j}^2 \tag{13}$$

where $M = [\mu_{i,j}]_{c \times n}$ and $\mu_{i,j}$ are the membership degrees of the jth data point in the ith cluster. In Eq. (13), the weighting exponent $m (1 < m < \infty)$ controls the fuzziness degree of each cluster. The minimization of J_m is performed by applying the following constraints on the membership values which, leads to the optimal partition

$$\forall\ j = 1, ..., n\ ,\ \forall\ i = 1, ..., c \Rightarrow \sum_{i=1}^{c} \mu_{i,j} = 1 \text{ and } 0 < \mu_{i,j} < 1 \tag{14}$$

The optimal membership functions is captured using Eq. (13) and Eq. (14) as

$$\tilde{\mu}_{i,j} = [\sum_{k=1}^{c} (\frac{d_{i,j}}{d_{j,k}})^{\frac{2}{m-1}}]^{-1}, \quad 1 \le i \le c \quad 1 \le j \le n \tag{15}$$

Once no further improvement is observed in $J_m(M, Q)$, the optimization process will terminate. It is required that the number of cluster centers be defined. Increasing the number of the clusters potentially enhances the accuracy of the model; however it may lead to model over-fitting and undesired computation cost. To find the optimal number, a cluster validity index can be employed to determine the optimal number of cluster centers in the data set. Various validity indexes are available [46].

3.2 Implementation

Here, the proposed Laguerre network based hierarchical fuzzy system model (LNBHFS) is considered to be a model with four inputs and six outputs. The inputs are: compressor outlet temperature, IGV position, compressor pressure ratio (CPR) and fuel flow rate. The model outputs estimate the six temperature sensors located at the exhaust of the gas turbine engine. With respect to the location of the sensors, they may show different temperatures and therefore, they should be modelled independently.

Figure (3-a) shows a schematic of the six sensors' model, and a more detailed schematic of LNBHFS for sensor 1 is presented in Figure (3-b). It is noted that this structure is considered the same for all the LNBHFS blocks in Figure (3-b). For a Laguerre network-based model, the appropriate order of the model should be chosen in order to minimize the modelling error. It is shown that for a single sensor with a single input, eight order Laguerre filters yield better results. Therefore, hierarchical fuzzy system (HFS) is introduced due to the increase in the number of inputs.The dominant pole parameters and the order of the Laguerre filters are required to be estimated. It is possible to use the system identification technique to fit a first order model on input-output data set and capture the process time constant [17]. Here, the order of the filter is chosen to be $a = 8$, which is an appropriate trade-off between the complexity and the accuracy of models. A combination of fuzzy c-mean clustering, recursive least-squares and back propagation methods are used for training FIS parameters.

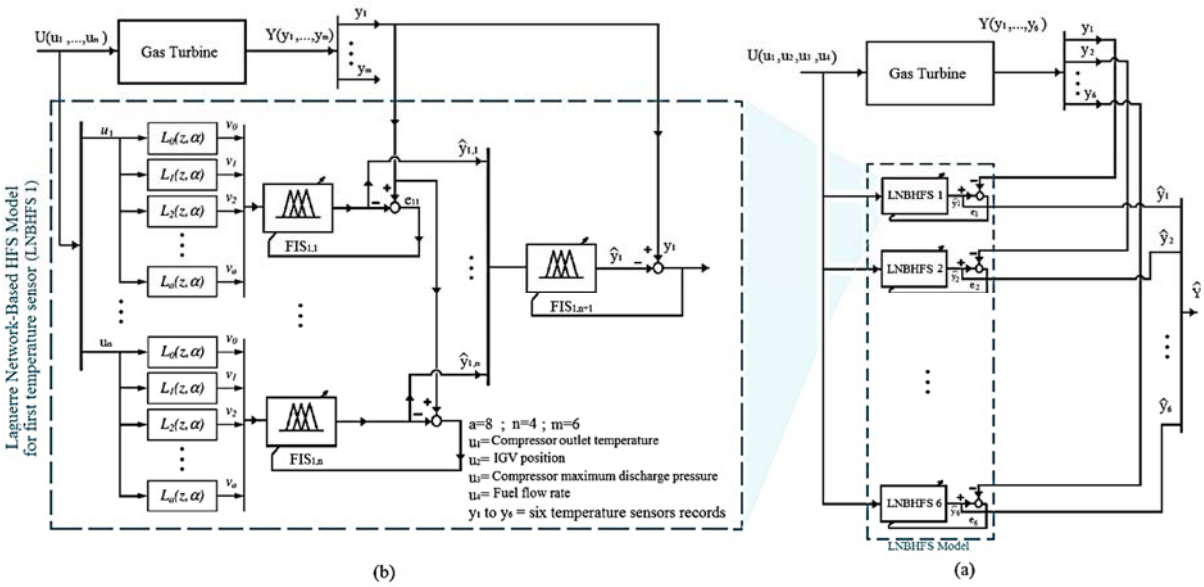

Figure 3 a) overall structure of the LNBHFS related to temperature sensors,
b) structure of LNBHFS1 model of the first temperature sensor

First, the FCM clustering is employed to extract the number of fuzzy rules and the parameters of membership functions. Then the parameters of fuzzy rules are adjusted with respect to the input-output data. The data set is split into three subsets of 60, 20, and 20 percent of the data, which are assigned to the training, validation and testing sets, respectively. In the validation or checking phase, the best structure, i.e., the number of the rules is selected for fuzzy systems. In all the three categories of training, validation and testing data, transient and steady state data exist.

3.3 LNBHFS models evaluation

In section Implementation, the soft model for the temperature sensors were implemented. In Figure (4), the error related to the validation phase of the developed fuzzy models for the temperature sensor#1 (LNBHFS1) with different numbers of rules is shown (for normalized data). According to the validation phase results, the optimal number of rules for each fuzzy system in the soft sensor#1 (LNBHFS1) is obtained from Figure (4). So, the optimality criterion is the lowest RMSE error in validation phase. The obtained results for LNBHFS1 responses are presented in Table (1). In addition, in Table (2), the root mean square error (RMSE) of the six temperature sensors in each phase of the training, validation and testing are presented. As an example of the test phase, a comparison between the output of the developed soft model for one of the temperature sensors (sensor#1) and the real values is presented in (5). The LNBHFS1 model receives four inputs of testing data (including compressor outlet temperature, inlet guide vane position, compressor maximum discharge pressure and fuel flow rate) to estimate the temperature sensor#1, which is shown by red dashed line in Figure (5). In this figure the sensor#1 measured values are shown by the blue line. As can be seen, the model outputs match very well with the measured values.

Table 1 Details of fuzzy systems for LNBHFS1

Model	FIS	Structure		RMSE ($\times 10^{-3}$)		
		Input	Rule	Train	Validation	Test
LNBHFS1	$Fis_{1,1}$	9	7	2.4	2.6	2.4
	$Fis_{1,2}$	9	6	2.7	2.6	3.0
	$Fis_{1,3}$	9	6	2.7	3.1	3.3
	$Fis_{1,2}$	9	8	2.2	2.7	2.8
	$Fis_{1,5}$	4	5	1.3	1.7	1.8

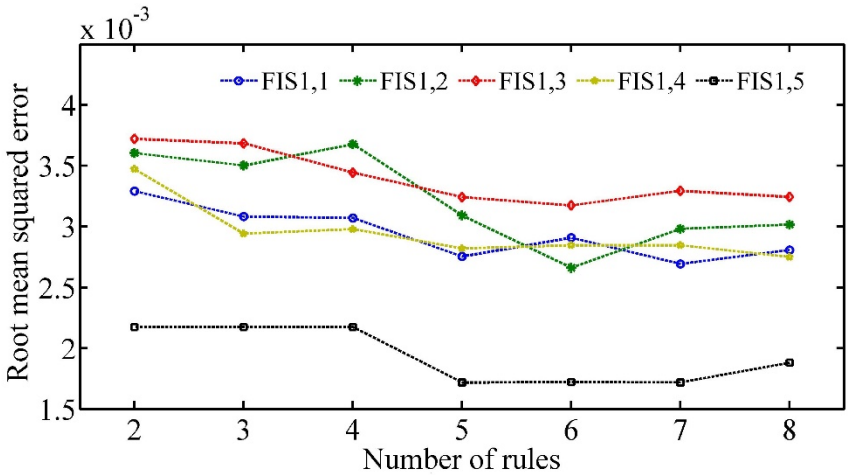

Figure 4 Validation error for LNBHFS1 fuzzy systems with different rules

Table 2 Root mean square error for each of the models

Model	RMSE ($\times 10^{-3}$)		
	Training	Validation	Testing
LNBHFS1	1.3	1.7	1.8
LNBHFS2	3.0	3.6	3.8
LNBHFS3	2.0	2.0	2.7
LNBHFS4	1.9	2.2	2.4
LNBHFS5	1.8	2.1	1.9
LNBHFS6	1.9	1.9	2.0

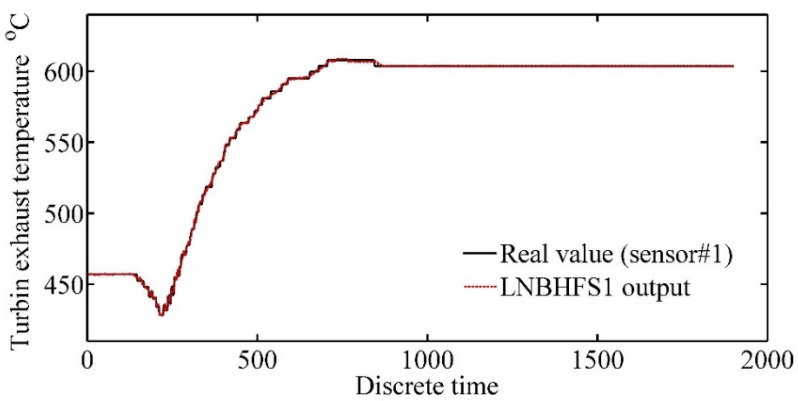

Figure 5 Comparison between the model output with actual values for sensor one

4 Adaptive threshold

In gas turbine units, the changes in the parameters such as air temperature, humidity, inlet pressure, fuel quality and load changes are the main sources of disturbances [47]. In the model-based fault detection process, due to uncertainties and disturbances, the developed model responses may not describe the real system behaviors very accurately. This may cause undesired deviations in the generated residuals and result in false alarms in fault detection [48].
The adaptive threshold methods are designed such that the deviations of the measured values from model output depend largely on the amplitude and frequency of inputs, noise, and disturbance. In a simple model, we can consider these variations as a function of $U(t)$, representing the static, and $\dot{U}(t)$, denoting the dynamic input. In complex systems, however, the classical methods are not sufficiently accurate. In these systems, as mentioned before, the soft computing based methods are used to model the system uncertainties such that after obtaining the residual, $R = y - \hat{y}$, a soft computing model, known as the error model, is identifiable. Thus, the inputs and outputs of the error model are the system inputs and residuals, denoted by $\hat{R}$, respectively [28]. In the next step, the threshold upper and lower bounds are calculated as

$$T_{u/l} = \hat{y} + (\hat{R} \pm t_{\beta} v) \tag{16}$$

where t_{β} is $N(0,1)$ the tabulated value assigned to a given confidence level, (in this paper, considered $t_{\beta} = 1$) and v is the standard deviation of sensors [49] .In Figure (6), fault diagnosis process is shown using adaptive residual.

Here, a neuro-fuzzy model is used for error modelling, which is discussed and in the following. To build the error model, the first step is to extract the residuals from the introduced soft sensors and use them as output for model training. Thus, the residual values are calculated from the models. In this section to avoid the complications, the Laguerre filter is not used in MEM, thus, the six fuzzy models with the inputs of compressor outlet temperature, IGV position, compressor pressure ratio (CPR), and fuel flow rate and one output (residual for each sensor) are generated. To do this, 60 %, 20 % and 20 % of all data is used in the phases of training, validation and testing, respectively. In the following, the simulation results of error model evaluation are presented.

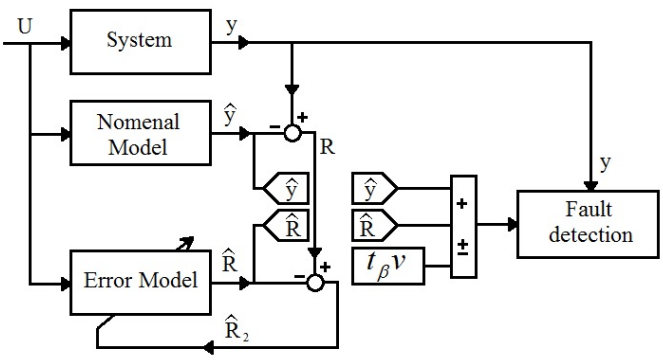

Figure 6 Fault diagnosis process using adaptive threshold

4.1 Error models evaluation

As an example Figure (7) illustrates the output of the error model for sensor#3,and the residual values (related to LNBHFS3 and sensor#3). In Table (3) the specifications of each of the error models are presented. As shown in Figure (7) and Table (3), the proposed model to estimate the uncertainty of the system is reasonably accurate. It should be noted that due to the high accuracy of sensors, residual values are very small; hence, a very high accuracy should not be expected from the error models. As an example, the upper and lower bounds for the adaptive threshold and measured values for sensor#3 are illustrated in Figure (8).

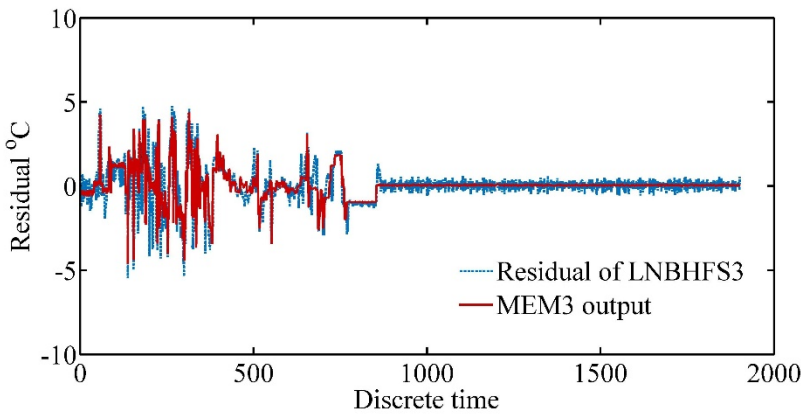

Figure 7 A comparison between residual values and error model output for sensor #3

Table 2 Root mean square error for each of the models

Model	RMSE ($\times 10^{-3}$)		
	Train	Validation	Test
MEM1	0.8	0.9	1.3
MEM2	1.6	1.3	1.7
MEM3	0.7	1.1	1.4
MEM4	0.9	1.2	1.0
MEM5	0.8	1.3	1.1
MEM6	0.6	1.3	1.4

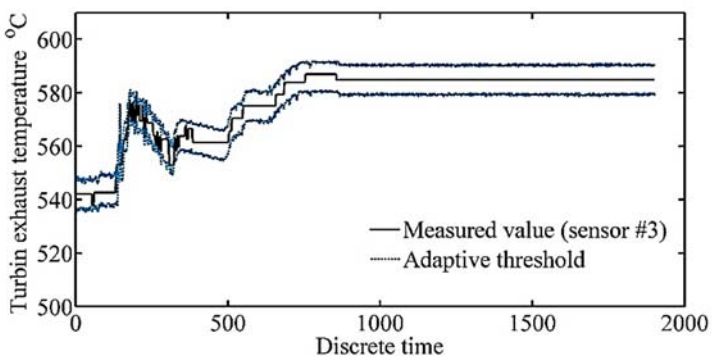

Figure 8 Upper bound and lower bound of adaptive threshold compared with measured values of the third sensor

Next, the performance of the presented adaptive threshold MEM approach against the disturbances is evaluated. As already mentioned, changing the environmental parameters, such as temperature and humidity and the process of compressor inlet air cooling system can cause of disturbances in gas turbine. Compressor outlet temperature is one of the parameters that can suffer disturbances. Thus, by applying some disturbances in the compressor outlet temperature, the residuals and adaptive threshold behaviors are examined. Figure (9) and Figure (10) depict the obtained results of applying two types of disturbance to the compressor outlet temperature respectively on sensor#1 and sensor#4. These figures illustrate the residuals and adaptive thresholds variations. In test data by adding the disturbances to the compressor output temperature, the difference between soft model output and the measured value increases. Therefore, the amount of residuals exceeds the fixed threshold, while as the MEM models work properly, adaptive threshold shows a quite robust behavior. It can be concluded that the adaptive threshold generator models are perfectly robust against disturbances, while the simple threshold approach exhibits fault in similar conditions. It should be noted that, the use of Laguerre network-based systems (or Laguerre filters) in soft model structure enhances the robustness of the fault diagnosis system against noise

5 Fault detection and fault diagnosis

In model-based fault diagnostic methods, there is always a concern that the model may not correctly predict the behavior of the system. For instance, if any of soft model input parameters is faulty, it is possible to see an incorrect value in the soft model output, because this type of data has not been used in the model training. To resolve this issue, we propose a parallel structure which realizes the soft model malfunction and the fault probability of the inputs.
In the proposed method, the outputs of the six temperature sensors are compared with the output values calculated by the soft model, and the deviation from the adaptive threshold for each sensor is evaluated. These six deviation values determine both the accuracy of the model and the error detection in the sensors. Eq. (17) formulates the approach to calculate the deviation from threshold as

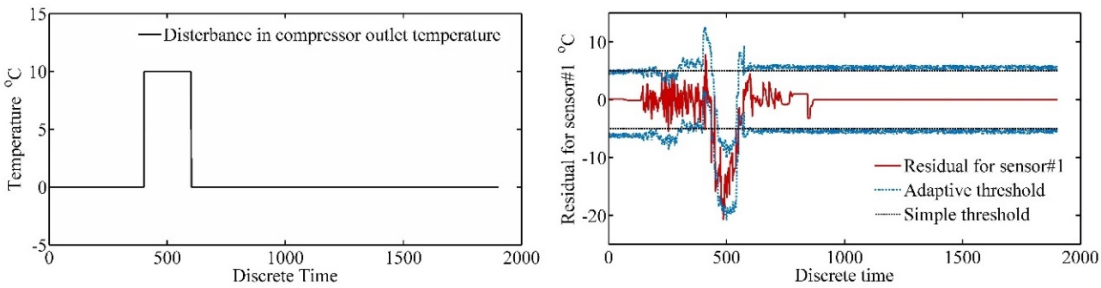

Figure 9 Obtained results of applying disturbance in the compressor outlet temperature for sensor#1

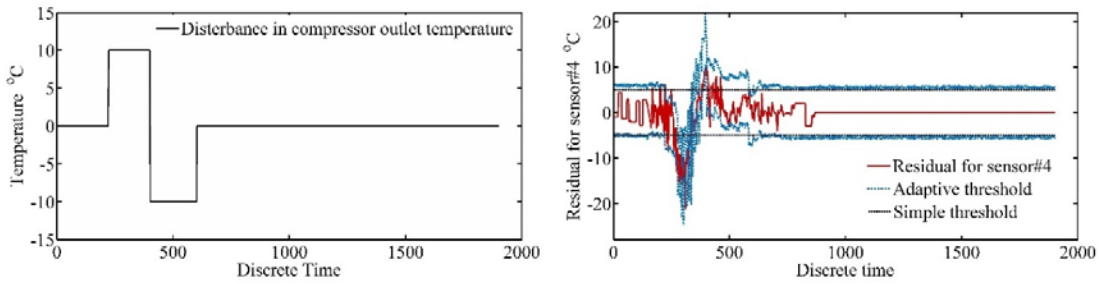

Figure 10 Obtained results of applying disturbance in the compressor outlet temperature for sensor#4

$$Input_{i=1,...,6} = \begin{cases} \dfrac{(y_i - \lambda_{upper})}{(\lambda_{upper} - \lambda_{lower})} & \text{if} \quad y_i \geq \lambda_{upper} \\ \dfrac{(\lambda_{lower} - y_i)}{(\lambda_{upper} - \lambda_{lower})} & \text{if} \quad y_i \leq \lambda_{lower} \end{cases} \tag{17}$$

In this work, the proposed method based on the fact that the six temperature sensors have been installed at various locations on the gas turbine exhaust and record different values. Because the possibility of the fault in multiple sensors at the same time is very small; Thus, the deviation from the threshold for more than two sensors is improbable and the soft model output is most likely untrue. This can be due to the soft model malfunction or other faults in the input parameters of soft model.

When of just two sensors exhibit significant deviations from thresholds, most likely the soft model is weak and less likely both sensors are faulty at the same time. When the five sensors do not deviate from threshold and the other sensor shows a large deviation, it can be said that the model output is correct and that one sensor is faulty. For such a case, the soft model output can also be relied on as a soft sensor. When the number of sensors with large deviations increases above three, it is more likely that the inputs are erroneous and less likely that the soft model is weak. To implement the multi-sensor fault diagnosis system, a Sugeno type fuzzy system with six inputs (number of symptoms) is adopted. In this system the number of outputs is eight, of which, the first six represent the sensors status, while output number seven and number eight show the soft model status and fault in inputs, respectively.

The number of membership functions at the inputs is three Gaussian functions and the number of functions on all outputs, except the eighth output, is three constant functions with values of $[0\ 0.5\ 1]$. The eighth output is five constant functions with the values of $[0\ 0.25\ 0.5\ 0.75\ 1]$. The output values are in the range of 0 to 1, which define the fault of each output. When no residual exceeds the thresholds all outputs will be zero. On the other hand, by dividing each output into total outputs, the relative probability of faults in each of the eight conditions becomes clear and the user or fault management system is notified to make a decision. The outputs of fault diagnosis system are expressed as the relative probability of fault in each of the eight states using Eq. (18)

$$P_{Fault,i=1,...,6} = \begin{cases} Output_{i=1,...,8} & \text{if} \quad (\sum_{i=1}^{8} Output_i) < 1 \\ \dfrac{Output_{i=1,...,8}}{\sum_{i=1}^{8} Output_i} & \text{if} \quad (\sum_{i=1}^{8} Output_i) \geq 1 \end{cases} \tag{18}$$

In Figure (11), the scheme of fuzzy fault diagnosis system is shown. The fuzzy fault diagnosis system has 70 rules some of which are listed in Table (4).

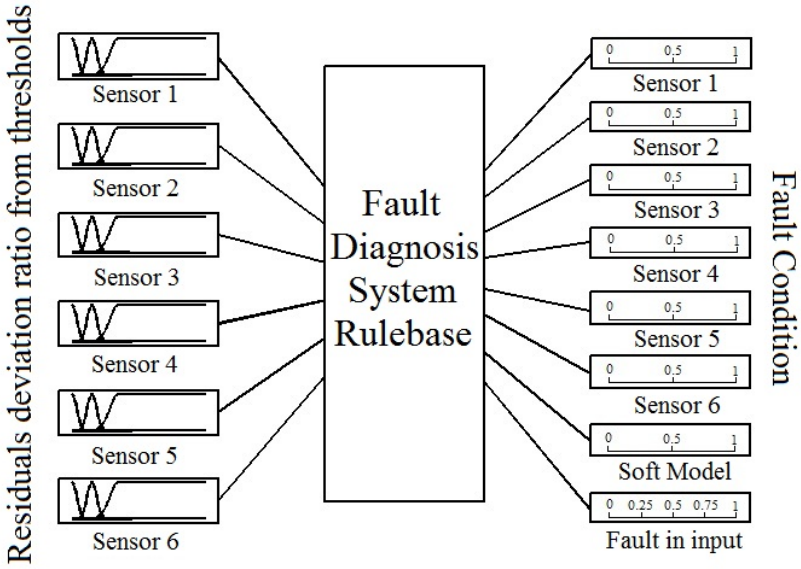

Figure 11 Schematic of fuzzy fault diagnosis system

Table 4 Selection of the fuzzy system rules, S: small, L: large, VL: very large, -S: not small, large or very large

Rule No	Input 1	Input 2	Input 3	Input 4	Input 5	Input 6	Output 1	Output 2	Output 3	Output 4	Output 5	Output 6	Output 7	Output 8
1	S	S	S	S	S	S	0	0	0	0	0	0	0	0
2	L	S	S	S	S	S	2	0	0	0	0	0	0	0
3	VL	S	S	S	S	S	3	0	0	0	0	0	0	0
4	S	L	S	S	S	S	0	2	0	0	0	0	0	0
5	S	VL	S	S	S	S	0	3	0	0	0	0	0	0
6	S	S	L	S	S	S	0	0	2	0	0	0	0	0
7	S	S	VL	S	S	S	0	0	3	0	0	0	0	0
8~13	…	…	…	…	…	…	…	…	…	…	…	…	…	…
14	-S	-S	-S	-S	-S	-S	0	0	0	0	0	0	3	5
15	S	-S	-S	-S	-S	-S	0	2	0	0	0	0	3	4
16	-S	S	-S	-S	-S	-S	0	0	0	0	0	0	3	4
17~21	…	…	…	…	…	…	…	…	…	…	…	…	…	…
22	S	S	-S	-S	-S	-S	0	0	0	0	0	0	3	3
23	S	-S	S	-S	-S	-S	0	2	0	0	0	0	3	3
24~36	…	…	…	…	…	…	…	…	…	…	…	…	…	…
37	S	S	S	-S	-S	-S	0	0	0	0	0	0	3	2
38	S	S	-S	S	-S	-S	0	2	0	0	0	0	3	2
39~55	…	…	…	…	…	…	…	…	…	…	…	…	…	…
56	S	S	S	S	-S	-S	0	2	0	0	1	1	2	0
57	S	S	S	-S	S	-S	0	0	0	1	0	1	2	0
58~70	…	…	…	…	…	…	…	…	…	…	…	…	…	…

* e.g. Rule 23: IF Input1 is S AND Input2 is not S AND Input3 is S AND Input4 is not S AND Input5 is not S AND Input6 is not S THEN Output7 is 3 AND Output8 is 3

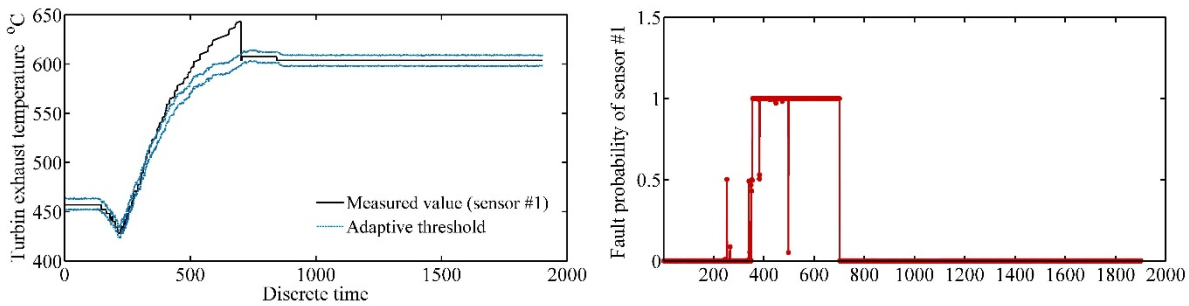

Figure 12 Deviation of the first sensors faulty signal from threshold and the output of fuzzy fault diagnosis system for sensor#1

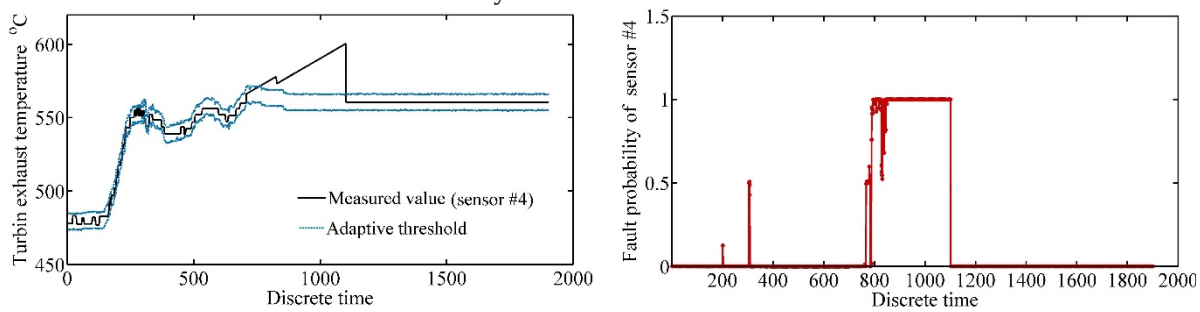

Figure 13 Deviation of the fourth sensors faulty signal from threshold and the output of fuzzy fault diagnosis system for sensor#4

5.1 Fault detection and diagnosis result

To evaluate the performance of the fuzzy fault detection and the fault diagnosis system in different failure cases, artificial faults are applied to the sensors and the responses of intelligent system are examined. Three different types of fault can occur in measurement systems such as sensors, which include an increase in amplitude of noise, complete failure and deviation from actual value. Among these faults, detection of deviations from the actual value is more difficult which in this paper tried to detect this fault. For this aim, a ramp signal with a slight increase is added to the measured values for a certain period of time. In the first case, the occurrence of faults in only one sensor is investigated, where the other five sensors operate correctly.
The obtained results for sensors#1 and #4 are shown in Figure (12) and (13), respectively.
For sensor#1, the artificial fault signal is added to the sensor output from samples 300 to 700. Similarly, for sensor #4, a fault is applied to the sensor from sample 800 to 1100.

The results show that fuzzy fault detection system can perfectly recognize the sensors' fault in both cases. Fluctuations in some parts of the fault probability signal indicate that one or more sensors' output may deviate from the upper bound threshold of the soft models. Therefore, the fault detection system realizes that the fault is more likely in the soft model. In other words, soft model is not sufficiently accurate at this instance. To check the performance of the fault diagnosis system in the case of a fault in a sensor, Eq. (19) is employed. This equation determines the accuracy of fault diagnosis system at each sensor as

$$\Psi_i = \frac{f_{Ti}}{f_{Ti} + f_{Fi}} \tag{19}$$

where f_{Ti} is the number of correct fault diagnosis in the sensor i and f_{Fi} is the number of false detections when the fault occurs in the sensor i. The result of each sensor's fault detection accuracy is tabulated in Table (5). In model-based fault detection, various causes (most notably soft model's weakness and fault occurrence in the model inputs) can lead to significant deviations in a number of sensors simultaneously compared to the output of the soft model.

Table 5 Fault diagnosis accuracy of system in diagnosing faults correctly in sensors

	Sensor 1	Sensor 2	Sensor 3	Sensor 4	Sensor 5	Sensor 6
Accuracy	98.2 %	97.1%	97.9%	98%	97.7%	98.6%

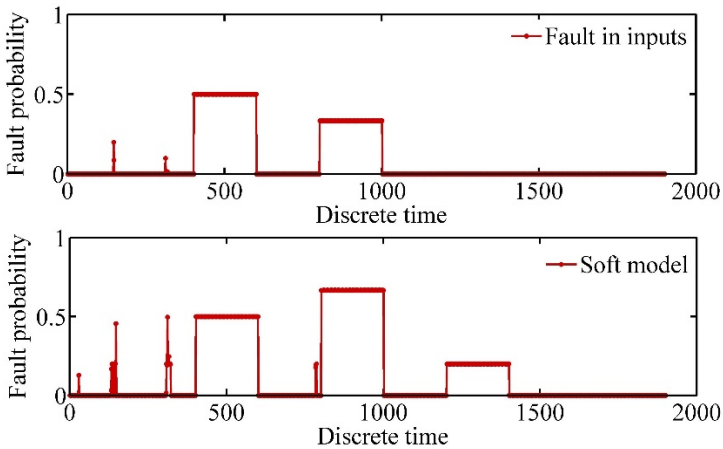

Figure 14 The output of fault diagnosis system when the sensor data exceeds threshold value compared to model outputs in more than one sensor. (From 400 to 600 in six sensors, from 800 to 1000 in the first four sensors and from 1200 to 1400 in the first two sensors)

This is due to the fact that the probability of fault in more than two sensors at the same time is very low. In this case, an accurate diagnosis of the cause of deviation (the weakness of the model and the probability of fault in the model inputs) is a difficult task.

To investigate the operation of the proposed fuzzy fault diagnosis system, at various time intervals some artificial faults, for six sensors, four sensors and two sensors have been inserted. Thereby, in the samples' interval 200 to 400 of each sensor, in the sample range of 600 to 800 of the first four sensors and in the range of 1000 to 1200 of the first two sensors, show significant deviations compared with the output of the model.

In Figure (14), the results of the last two outputs of the fuzzy fault diagnosis system are depicted. It is shown that in the samples 400 to 600, which all 6 sensor residuals have a large deviation from the thresholds, the probability of the two states is equal. In the case that four sensors have large deviations, i.e., between 800 to 1,000, the fault diagnosis system realizes that the probability of faults in the model is more than that of the faults in the inputs. Additionally, in the case of large deviations in only two sensors, the probability of fault in model is 20 % and in this case the fault diagnosis system for sensors one and two detects the probability of simultaneous faults to be 40 %.

A comparison between the presented fault diagnosis system and previous studies on the gas turbine fault diagnosis such as [50, 26, 3] reveals that in most of these studies, no nonlinear robust fault diagnosis method is considered. Robustness is a key factor in the case of industrial systems like gas turbines, where nonlinearity and uncertainty can lead to a wrong diagnosis. In reference [50], a classical observer-based active robust fault detection method is used in an industrial gas turbine prototype model; however, the classical observer-based methods are only suitable for linear systems.

In the studies where the soft computing methods are used, in all the cases a static nonlinear soft model is presented [26, 3]. In this study, however, we take advantage of a nonlinear orthonormal basis function (NOBF) model to characterize the essential dynamical behavior.

In this model, Laguerre filters are used for linear dynamic parts and hierarchical fuzzy systems are used for nonlinear static parts. The adaptive threshold method for robust fault diagnosis has been used in gas turbine benchmark [3] and in the present study once again, and its accuracy, reliability and robustness are proven.

- Increase the accuracy of soft sensor due to adding the linear dynamics part.
- Fault detection system by utilizing all sensors information fusion in the decision level provides reliable reports about the status of sensors in the multi-sensor system.
- This system allows for the recognition of the possible malfunctions of the soft models as well as the faults in the models inputs.

Robustness should be increased because:

- Adding the Laguerre filters in soft models structure enhances the robustness of the fault diagnosis system against noise.
- Using adaptive threshold approach enhances robustness against the disturbances.

6 Conclusions

In this study, the multi-sensor fault diagnosis in the exhaust temperature sensors of a V94.2 heavy duty gas turbine was presented. For this purpose a Laguerre network-based fuzzy model was used. In order to deal with dimensionality problems associated with fuzzy models, the structure of the model's non-linear part was considered as a hierarchical fuzzy system. In addition, in order to reduce the computational efforts of training the fuzzy models, fuzzy c-means clustering technique was used to define the structure of fuzzy system and obtain the parameters of membership functions. The novelties of the proposed method can be summarized as

- A fair comparison between the responses of the developed models for the sensors and the data taken from the real system performances, confirms the accuracy of the models.
- An adaptive threshold based on neuro-fuzzy system was used to cope with the uncertainties of the models and disturbances to improve the accuracy and robustness of the fault detection system.
- For the multi sensor fault diagnosis, a new fuzzy system by high-level information fusion was used. The proposed technique considerably improved the reliability of the fault diagnosis system. In addition, it allowed detecting the soft model weaknesses and faulty input parameters.

The proposed approach for fault diagnosis utilizes a highly accurate model with adaptive threshold based on error model with high reliability. This technique can be used with some modifications in various industrial applications. Further improvement may be achieved by applying data/sensor fusion techniques for compensating the faulty measurement by sensor.

In addition, employing more sophisticated fuzzy inference system, such as fuzzy type II (interval fuzzy), may improve the robustness and accuracy of fault diagnosis system against system uncertainties and remove the needs for adaptive threshold. In the following, it is suggested to examine the use of Laguerre network filter in the adaptive threshold method for adding the linear dynamic part to model error modeling (MEM) approach. Other issues that could be examined include: using a similar fault diagnosis system for fault diagnosis in multi-sensor networks and developing the proposed method for fault position detection (to detect where faults are happening) in monitoring industrial process (such as rotating machines' faults) and networked systems.

References

[1] Ogaji, S., Singh, R., and Probert, S., "Multiple-sensor Fault-diagnoses for a 2-shaft Stationary Gas-turbine", Applied Energy, Vol. 71, No. 4, pp. 321–339, (2002).

[2] Li, Y.G., "Performance-analysis-based Gas Turbine Diagnostics: A Review", Proceedings of the Institution of Mechanical Engineers, Part A: Journal of Power and Energy, Vol. 216, No. 5, pp. 363–377, (2002).

[3] Nozari, H.A., Shoorehdeli, M.A., Simani, S., and Banadaki, H.D., "Model-based Robust Fault Detection and Isolation of an Industrial Gas Turbine Prototype using Soft Computing Techniques", Neurocomputing, Vol. 91, pp. 29–47, (2012).

[4] Palme, T., Fast, M., and Thern, M., "Gas Turbine Sensor Validation Through Classification with Artificial Neural Networks", Applied Energy, Vol. 88, No. 11, pp. 3898-3904, (2011).

[5] Sarkar S., Jin, X., and Ray, A., "Data-driven Fault Detection in Aircraft Engines with Noisy Sensor Measurements", Journal of Engineering for Gas Turbines and Power, Vol. 133, No. 8, pp. 081602–081602, (2011).

[6] Rahbar, M., Amirkhani, S., Chaibakhsh and A., Rahbar, F., "Unbalance Fault Localization in Rotating Machinery Disks using EEMD and Optimized Multi-class SVM", in: Instrumentation and Measurement Technology Conference (I2MTC), 2017 IEEE International, IEEE, pp. 1–6, Turin, Italy, (2017).

[7] Lemma, T., and Hashim, F., "Wavelet Analysis and Auto-associative Neural Network-based Fault Detection and Diagnosis in an Industrial Gas Turbine", in: Business Engineering and Industrial Applications Colloquium (BEIAC), 2012 IEEE, pp. 103–108, (2012).

[8] Korbicz, J., Koscielny, J.M., Kowalczuk, Z., and Cholewa, W., "*Fault Diagnosis: Models, Artificial Intelligence, Applications*", Springer Science & Business Media, (2012).

[9] Palme, T., Fast, M., and Thern, M., "Gas Turbine Sensor Validation Through Classification with Artificial Neural Networks", Applied Energy, Vol. 88, No. 11, pp. 3898–3904, (2011).

[10] Tayarani-Bathaie, S.S., Vanini, Z.S., and Khorasani, K., "Dynamic Neural Network-based Fault Diagnosis of Gas Turbine Engines", Neurocomputing, Vol. 125, pp. 153–165, (2014).

[11] Isermann, R., "*Fault-diagnosis Applications: Model-based Condition Monitoring: Actuators, Drives, Machinery, Plants, Sensors, and Fault-tolerant Systems*", Springer Science and Business Media, (2011).

[12] Mrugalski, M., "*MLP in Robust Fault Detection of Static Nonlinear Systems, in: Advanced Neural Network-based Computational Schemes for Robust Fault Diagnosis*", Springer, pp. 69–92, (2014).

[13] Shabanian, M., and Montazeri, M., "A Neuro-fuzzy Online Fault Detection and Diagnosis Algorithm for Nonlinear and Dynamic Systems", International Journal of Control, Automation and Systems, Vol. 9, No. 4, pp. 665–670, (2011).

[14] Castro, L.R., Agamennoni, O.E., and Alvarez, M.P., “From Linear to Nonlinear Identification: One Step at a Time”, Mathematical and Computer Modelling, Vol. 51 pp. 473–486, (2010).

[15] Amirkhani, S., Nasirivatan, S., Kasaeian, A., and Hajinezhad, A., “Ann and ANFIS Models to Predict the Performance of Solar Chimney Power Plants”, Renewable Energy, Vol. 83, pp. 597–607, (2015).

[16] Chaibakhsh, A., Amirkhani, S., and Piredeir, P., “Temperature Sensor Fault Diagnosing in Heavy Duty Gas Turbines using Laguerre Network-based Hierarchical Fuzzy Systems”, in: Innovations in Intelligent Systems and Applications (INISTA), International Symposium on, IEEE, pp. 1–6, Madrid, Spain, (2015).

[17] Sanayei, Y., Chaibakhsh, N., Chaibakhsh, A., Pendashteh, A.R., Ismail, N., and Teng, T.T., “Long-term Prediction of Biological Wastewater Treatment Process Behavior via Wiener-laguerre Network Model”, International Journal of Chemical Engineering, Vol. 2014, (2014).

[18] Zhao, J., Ma, X., Zhao, S., and Fei, J., “Hammerstein Identification of Supercharged Boiler Superheated Steam Pressure using Laguerre-fuzzy Model”, International Journal of Heat and Mass Transfer, Vol. 70, pp. 33–39, (2014).

[19] Mrugalski, M., “An Unscented Kalman Filter in Designing Dynamic GMDH Neural Networks for Robust Fault Detection”, International Journal of Applied Mathematics and Computer Science, Vol. 23, pp. 157–169, (2013).

[20] Serdio, F., Lughofer, E., Pichler, K., Buchegger, T., Pichler, M., and Efendic, H., “Fault Detection in Multi-sensor Networks Based on Multivariate Time-series Models and Orthogonal Transformations”, Information Fusion, Vol. 20, pp. 272–291, (2014).

[21] Asgari, H., Chen, X., Morini, M., Pinelli, M., Sainudiin, R., Spina, P.R., and Venturini, M., “NARX Models for Simulation of the Start-up Operation of a Single-shaft Gas Turbine”, Applied Thermal Engineering, Vol. 93, pp. 368–376, (2016).

[22] Lee, M.L., Chung, H.Y., and Yu, F.M., “Modeling of Hierarchical Fuzzy Systems”, Fuzzy Sets and Systems, Vol. 138, No. 2, pp. 343–361, (2003).

[23] Isermann, R., “*Fault-diagnosis Systems: An Introduction from Fault Detection to Fault Tolerance*”, Springer Science and Business Media, (2006).

[24] Patan, K., Witczak, M., and Korbicz, J., “Towards Robustness in Neural Network-based Fault Diagnosis”, International Journal of Applied Mathematics and Computer Science, Vol. 18, No. 4, pp. 443–454, (2008).

[25] Chen, J., and Patton, R. J., “*Robust Model-based Fault Diagnosis for Dynamic Systems*”, Vol. 3, Springer Science & Business Media, (2012).

[26] Simani, S., “Identification and Fault Diagnosis of a Simulated Model of an Industrial Gas Turbine”, Industrial Informatics, IEEE Transactions on, Vol. 1, No. 3, pp. 202–216, (2005).

[27] Schneider, H., "Implementation of a Fuzzy Concept for Supervision and Fault Detection of Robots", in: Proc. First European Congress on Fuzzy and Intelligent Technologies, EUFIT, Vol. 93, pp. 775–780, Aachen, Germany, (1993).

[28] Reinelt, W., Garulli, A., and Ljung, L., "Comparing Different Approaches to Model Error Modeling in Robust Identification", Automatica, Vol. 38, No. 5, pp. 787–803, (2002).

[29] Jafari, M., "Optimal Redundant Sensor Configuration for Accuracy Increasing in Space Inertial Navigation System", Aerospace Science and Technology, Vol. 47, pp. 467–472, (2015).

[30] Basir, O., and Yuan, X., "Engine Fault Diagnosis-based on Multi-sensor Information Fusion using Dempster-shafer Evidence Theory", Information Fusion, Vol. 8, No. 4, pp. 379–386, (2007).

[31] Nelles, O., "*Nonlinear System Identification: from Classical Approaches to Neural Networks and Fuzzy Models*", Springer Science and Business Media, (2001).

[32] Campello, R., Zuben, F.V., Amaral, W., Meleiro, L., and Filho, R.M., "Hierarchical Fuzzy Models within the Framework of Orthonormal Basis Functions and their Application to Bioprocess Control", Chemical Engineering Science, Vol. 58, No. 18, pp. 4259–4270, (2003).

[33] Alci, M., and Asyali, M.H., "Nonlinear System Identification via Laguerre Network Based Fuzzy Systems", Fuzzy Sets and Systems, Vol. 160, No. 24, pp. 3518–3529, (2009).

[34] Heuberger, P.S.C., Van-Den-Hof, P.M.J., and Wahlberg, B., "*Modelling and Identification with Rational Orthogonal Basis Functions*", Springer Science & Business Media, (2005).

[35] Babuka, R., and Verbruggen, H., "Neuro-fuzzy Methods for Nonlinear System Identification", Annual Reviews in Control, Vol. 27, No. 1, pp. 73–85, (2003).

[36] Skrjanc, I., Blazic, S., and Agamennoni, O., "Interval Fuzzy Modeling Applied to Wiener Models with Uncertainties", Systems, Man, and Cybernetics, Part B: Cybernetics, IEEE Transactions on, Vol. 35, No. 5, pp. 1092–1095, (2005).

[37] Hines, D.J.W., Wesley, J., and Uhrig, R.E., "Signal Validation using an Adaptive Neural Fuzzy Inference System", Nuclear Technology, Vol. 119, No. 2, pp. 181–193, (1997).

[38] Zajaczkowski, J., and Verma, B., "Selection and Impact of Different Topologies in Multi-layered Hierarchical Fuzzy Systems", Applied Intelligence, Vol. 36, No. 3, pp. 564–584, (2012).

[39] Chaibakhsh, A., Chaibakhsh, N., Abbasi, M., and Norouzi, A., "Orthonormal Basis Function Fuzzy Systems for Biological Wastewater Treatment Processes Modeling", Journal of Artificial Intelligence and Soft Computing Research, Vol. 2, No. 4, pp. 343–356, (2012).

[40] Johansen, T.A., and Foss, B.A., “Semi-empirical Modeling of Nonlinear Dynamic Systems through Identification of Operating Regimes and Local Models”, Neural Network Engineering in Dynamic Control Systems, pp. 105–126, (1995).

[41] Masnadi-Shirazi, M., and Aleshams, M., “Laguerre Discrete-time Filter Design”, Computers & Electrical Engineering, Vol. 29, No. 1, pp. 173–192, (2003).

[42] Silva, T.O.e., “On the Determination of the Optimal Pole Position of Laguerre Filters”, IEEE Transactions on Signal Processing, Vol. 43, No. 9, pp. 2079–2087, (1995).

[43] Jang, J.S., “ANFIS: Adaptive-network-based Fuzzy Inference System”, Systems, Man and Cybernetics, IEEE Transactions on, Vol. 23, No. 3, pp. 665–685, (1993).

[44] Ghaffari, A., Mehrabian, A.R., and Mohammad-Zaheri, M., “Identification and Control of Power Plant De-superheater using Soft Computing Techniques”, Engineering Applications of Artificial Intelligence, Vol. 20, No. 2, pp. 273–287, (2007).

[45] Beliakov, G., and King, M., “Density Based Fuzzy C-means Clustering of Nonconvex Patterns”, European Journal of Operational Research, Vol. 173, No. 3, pp. 717–728, (2006).

[46] Zhang, Y., Wang, W., Zhang, X., and Li, Y., “A Cluster Validity Index for Fuzzy Clustering”, Information Sciences, Vol. 178, No. 4, pp. 1205–1218, (2008).

[47] Kim, J.S., Powell, K.M., and Edgar, T.F., “Nonlinear Model Predictive Control for a Heavy-duty Gas Turbine Power Plant”, in: American Control Conference (ACC), IEEE, pp. 2952–2957, (2013).

[48] Ziyabari, S.H.S., and Shoorehdeli, M.A., “Robust Fault Diagnosis Scheme in a Class of Nonlinear System Based on Uio and Fuzzy Residual”, International Journal of Control, Automation and Systems, pp. 1–10, (2017).

[49] Patan, K., “*Artificial Neural Networks for the Modelling and Fault Diagnosis of Technical Processes*”, Springer Science and Business Media, Vol. 377, (2008).

[50] Simani, S., and Fantuzzi, C., “Dynamic System Identification and Model-based Fault Diagnosis of an Industrial Gas Turbine Prototype”, Mechatronics, Vol. 16, No. 6, pp. 341–363, (2006).

Nomenclature

$A_{i,j}$	Membership function associated with jth input variable
c	Number of fuzzy rules
d	Distance
J_m	Objective function
k	kth data
L_i	Laguerre basis filter in z domain
l_i	Laguerre basis filter
N	Number of fuzzy system inputs
n	number previous of data used in the current analysis
P_{Fault}	Fault probability
Q	Vector of cluster centers
R	Residual
R_i	ith rule
$\hat{R}$	MEM model output
u	Input
u_i	Input
y	Output
y_i	Output
$\hat{y}_i$	Soft model output
Z	Vector of data
z	z Domain parameter
α	Dominant pole parameter of Laguerre filter
λ_{lower}	Lower bound of threshold
λ_{lower}	Upper bound of threshold
$\mu_{i,j}$	Membership degree of the jth data point in the ith cluster
Ψ	Fault detection accuracy
σ	Center of Gaussian membership function
ξ	Spread of Gaussian membership function

Acronyms

ANFIS	Adaptive neuro-fuzzy inference system
CPR	Compressor pressure ratio
FCM	Fuzzy c-means
FIS	Fuzzy inference system
HFS	Hierarchical fuzzy system
LNBFM	Laguerre network-based fuzzy model
LNBHFS	Laguerre network-based hierarchical fuzzy system model
MEM	Model error modelling
NARX	Nonlinear autoregressive exogenous
NLMA	Nonlinear moving average system
NOBF	Nonlinear orthonormal basis function
RMSE	Root mean squared error
TSK	Takagi, Sugeno and Kang type of fuzzy model